Middle Atlantic Products

EXCEPTIONAL SUPPORT & PROTECTION™

SBX Series Wall Mount Enclosure

GREENGUARD Children & Schools Indoor Air Quality Certified | RoHS | EIA Compliant

Economical wall mount rack for small systems

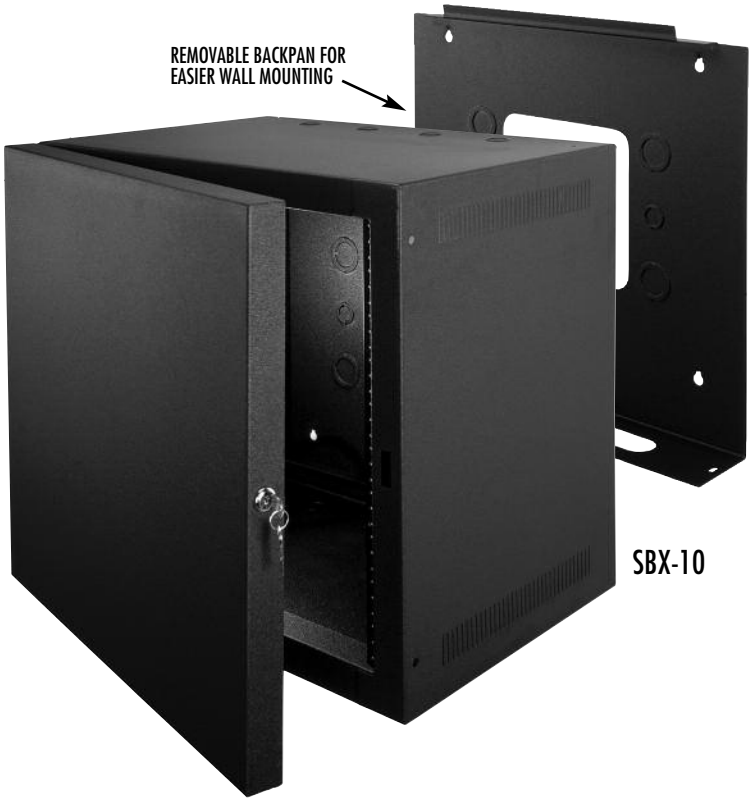

SBX-10

Features

- 7 space (12-1/4") and 10 space (17-1/2") racking height
- Removable backpan
- Standard locking front door swings 180 degrees
- Deep rail-to-door clearance provides flexibility unlike flush door designs
- Most rugged door hinge in the industry
- 11-gauge threaded rack rails
- Aesthetic perforations provide superior ventilation over louvered designs
- Large pull-box sized laser KO in backpan
- 1/2" and 3/4" electrical knockouts on top and bottom
- 1/2", 3/4", 1", and 1-1/2" electrical knockouts on rear
- 16 and 18-gauge fully welded construction
- 14-3/4" cabinet depth, 1-1/2" door depth
- Attractive and durable black textured powder coat finish

Architects' and Engineers' Specifications

EIA compliant 19″ wall mount equipment rack shall be Middle Atlantic Products model # SBX-__ (7,10). Overall dimensions of rack shall be 22.3″ W x 17″ D x __ (15.5″, 20.5″), H with ___(7,10) rackspaces of useable height and 14.75″ useable depth. Weight capacity of SBX-__ (7,10) shall be __ (75, 100) lbs. Rack shall be constructed of the following materials: top and bottom shall be 16-gauge steel, sides and door shall be 18-gauge steel, all rack elements shall be phosphate pre-treated and have a black powder coat finish. Rack shall come equipped with one pair of 11-gauge steel rackrail with tapped 10-32 mounting holes in universal EIA spacing with black e-coat finish and marked rackspaces. Rack shall include factory installed door with lock and key and security screws and security bit for tamper-proof backpan mating. Welded-on sides include vertical slotted vent pattern at top and bottom. Rack shall have four each on top and bottom 1/2″ or 3/4″ cable knockouts, and six cable knockouts on backpan, four 1-1/2″ or 1″, and 1/2″ or 3/4″. Rack shall be a two piece construction allowing for mounting of backpan to wall and preloading of rack, prior to installing rack to wall. SBX shall be GREENGUARD Indoor Air Quality Certified for Children and Schools. SBX shall be RoHS EU Directive 2002/95/EC compliant. Rack shall be manufactured by an ISO 9001 and ISO 14001 registered company. Rack shall be warrantied to be free from defects in materials or workmanship under normal use and conditions for the lifetime of the product.

96-068 / rev 6d / 08-11-10 / SBX Series Enclosure

US: New Jersey • California • Illinois • Voice: 973-839-1011 Fax: 973-839-1976 • middleatlantic.com
Canada: Ontario • British Columbia • Voice: 613-836-2501 Fax: 613-836-2690 • middleatlantic.ca

SBX Series basic dimensions

All dimensions in inches unless otherwise noted [All dimensions in bracket are in millimeters]

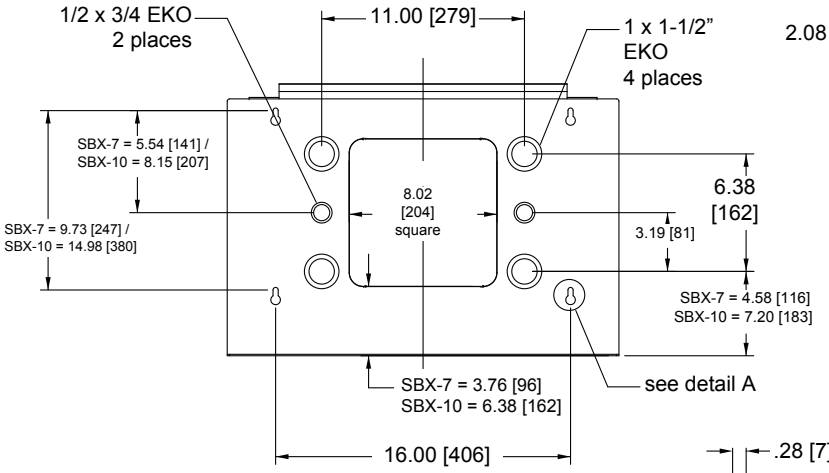

TOP VIEW

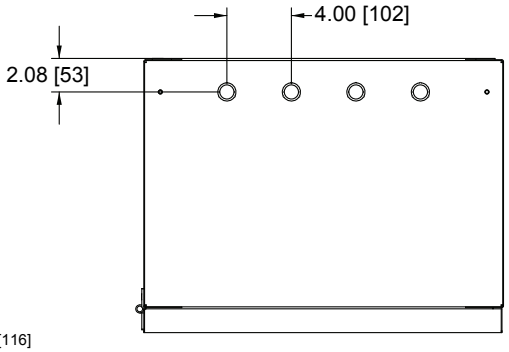

FRONT VIEW

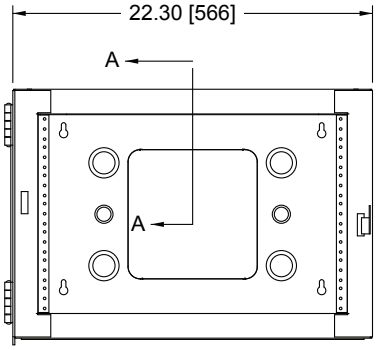

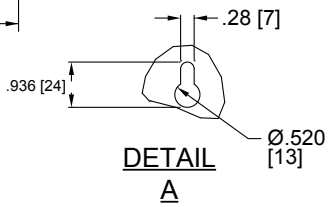

DETAIL
A

SIDE VIEW

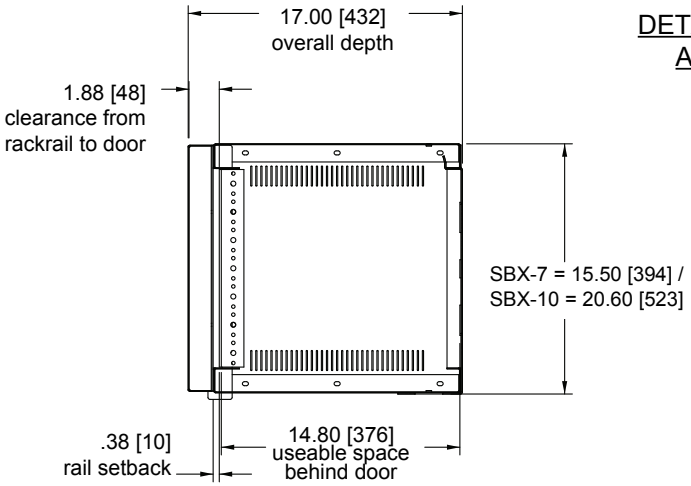

BOTTOM VIEW

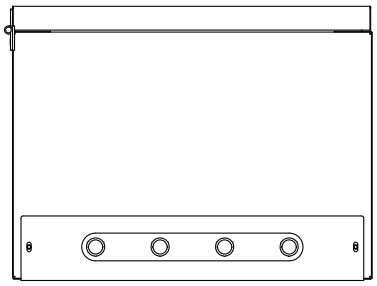

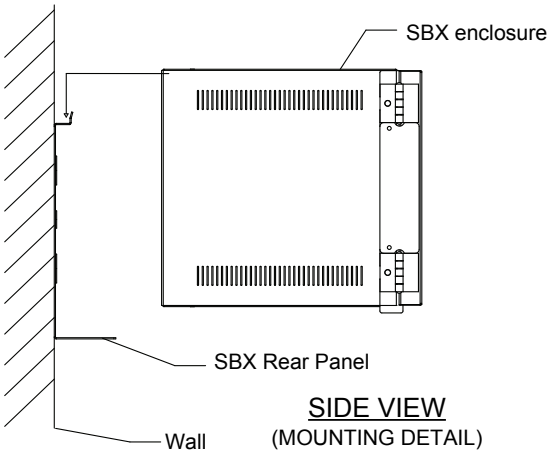

SIDE VIEW
(MOUNTING DETAIL)

Part #	Racking Height	Weight Capacity
SBX-7	12-1/4" (7 space)	75 lbs.
SBX-10	17-1/2" (10 space)	100 lbs.

Middle Atlantic Products